WIRING REQUIREMENTS
AND
DIAGRAMS

This book supersedes all Carroll County REMC books printed prior to September 2009.

FOREWORD

Herein are sections, items, and diagrams concerning the application of wiring devices, wiring systems, and electrical equipment on the farm and in the homes served by the Carroll County REMC.

The following sections are in accordance with the National Electric Code, National Electric Safety Code, and with recommendations made by the National Fire Protection Association, formed to study wiring practices.

This information is made available by the Member Services Department for the convenient distribution to REMC members, electricians, and interested parties.

The REMC reserves the right to refuse to make connection to members' wiring equipment or to continue services thereto when in its judgment such installation is unsafe and could cause injury or death.

Any member requesting a service connection will be required to deposit with the REMC a $15 refundable membership. Each new applicant for residential service with the REMC deemed credit worthy shall not be required to make a cash deposit as a condition of receiving service. Those not deemed credit worthy will be required to make a cash deposit. Upon request for disconnect, the entire $15 plus any other billing deposit is refundable, less any outstanding bills owed the Cooperative.

For further explanation, contact the Carroll County REMC office at 119 West Franklin Street, Delphi, Indiana 46923 (765)564-2057.

All three-phase applications and special single-phase applications must contact the REMC office.

ELECTRIC SAFETY

When installing antennas, grain bins or other building of any type or design near power line, contact the REMC to be sure there is proper clearance between the structure and the existing lines.

SECTION 1 - SERVICE ENTRANCE

METER ON THE HOUSE

The REMC will designate the location of the meterbase on the structure. In overhead service wire installation, REMC furnishes the contact insulator to the member's house or riser. Member installs complete entrance up to and including weatherhead (cable, conductor, or riser).

If the riser is used as the support of the service wires coming from the transformer, it must be a minimum of 2" in diameter and must be rigid steel conduit. If the riser is not used as a support, intermediate metal conduit, rigid nonmetallic conduit or electrical metal tubing with proper fitting may be used. No black pipe may be used. Meter base height must be between five and six feet above ground level and accessible at all times for reading, testing, changing and any other service that is necessary.

No meter installation shall be within an enclosure but must be on the outside where it is accessible at all times for maintenance and in case of ***fire or other emergency.***
When remodelling or making an addition to a building which will enclose the meter, the complete meter installation must be relocated to the outside.
The service to any meter installation found to be enclosed will be disconnected 30 days after notice to relocate has been given.

SERVICE MASTS

When the service mast is used for the support contact of the service drop, it shall not be less than 2" rigid galvanized conduit. When the contact point on the riser is 24" or more above the roof to obtain the 12' ground clearance for the service drop, the service mast must be braced. It shall be securely supported to exterior walls and roof framing.

TYPE SE (SERVICE ENTRANCE) CABLE ENTRANCE

Shall be installed on the exterior of the structure, and shall terminate in the service disconnecting device either outside or inside the struc-

ture, at the most readily accessible location nearest the point of entrance of the service entrance cable. All cable entrances should be adequately stapled and complete with weatherhead and sill plate. Providing 18" of free wire out of the weatherhead for make up.

DISCONNECTS

A weatherproof disconnect shall be installed below the meter base if more than 10 feet of wire is needed from the meter base to the service panel.

SERVICE GROUNDING

Ground rods of nonferrous material shall not be smaller than 1/2” in diameter and a minimum of 8' in length. It shall be installed such that at least 8' of length is in contact with the soil.

On any installation up to and including 400 ampere capacity, #6 soft-drawn copper wire will be accepted from the ground rod to the meter base grounding terminal or the neutral bar in the disconnecting device. When there is a metal water system present, it shall be bonded to the neutral bar or grounding conductor by #6 soft-drawn copper wire. For other methods of grounding, refer to Article 250 of the NEC.

WIRE TYPE

Types, RH, RHH, RHW, TW, THW THWN, THHN, XHHW wire shall be installed in conduit. When installing conduit, the grounded neutral wire must be insulated. The insulated neutral must be identified so the serviceman can recognize it when making the final connection.

CONDUCTOR TYPES AND SIZES

INSULATION TYPES - RH, RHH, RHW, TW, THW, THWN, THHN AND XHHW

	APPROVED BY NATIONAL ELECTRIC CODE		REMC RECOMMENDED	
	COPPER	**ALUMINUM**	**COPPER**	**ALUMINUM**
100 ampere bus	#4	#2	#2	#2
125 ampere bus	#2	#1/0	#1	#1/0
150 ampere bus	#1	#2/0	#1/0	#2/0
200 ampere bus	#2/0	#4/0	#3/0	#4/0
400 ampere bus	350 MCM	500 MCM	500 MCM	750 MCM

SECTION II - SERVICE ENTRANCE PANEL

The service entrance panel in the dwelling shall not be less than 100 ampere capacity if the computed load is 10,000 watts or more or where the initial installation consists of six or more 2-wire branch circuits. The REMC recommends that a series type panel be installed with a full 100 ampere fused disconnect or breaker. The National Electric Code permits up to six switches or circuit breakers mounted in a single enclosure.

Also, it is recommended that any dwelling installing electric heating of more than 5,000 watts to install a 200 ampere service and service entrance panel. Center of service panel should be located 60" from floor level.

Services requiring larger than 200 ampere capacity may be installed by using more than one panel paralleled side by side providing each paralleled panel has a self-contained main disconnect that controls all circuits fed from the panel and provided the main disconnects of any and all can be operated from one standing position.

Any underground service from 100 or 200 ampere meter pole which goes to a structure on a permanent foundation is required to have an outdoor type disconnect device under the meter base on the pole. Direct burial cable type RR (heat and moisture resistance-neoprene sheath) USE (underground service entrance), or OF (underground feeder), shall be used. Bury a minimum of 30" and protect under roads and lanes, patios or any other permanently installed asphalt or concrete application. The conductor will be protected with either metallic or nonmetallic conduit. Also, protect with conduit where exposed down poles and where entering buildings. For meter pole installation see diagram in back of book.

All outside wiring shall be WP (weatherproof) insulated conductors from meter pole to building or building to building. The size of the conductor depends upon the capacity of the load being served and the distance of the run. At no time should the conductor be less than #8. Refer to the National Electric Code for the proper clearance over roofs, driveways and public roads.

SECTION III - INDIVIDUAL HOUSEHOLD CIRCUITS

STANDARD RANGE - Install #6/3 copper or #4/3 aluminum service entrance cable or nonmetallic range cable from the current protective device to either a flush or surface mounted 50 ampere receptacle.

A surface receptacle mounted as a flush unit, or vice versa, will not be approved. Maximum fusing for a range circuit is 60 ampere.

CUSTOM RANGE - Install not less than #10/3 copper or #8/3 aluminum wire, type NM (nonmetallic) cable from the 240-volt current protective device located in the main service panel to the junction center for each individual cooking assembly. Protect at no greater than 30 amperes. When two ovens are installed on one circuit, #8 copper or #6 aluminum must be used for this circuit protected at 40 amperes.

WATER HEATER - Shall be connected to the 240-volt protective device in the main panel with #10/2 copper NM (nonmetallic) cable with ground or #10/3 NM (nonmetallic) cable. There shall be a continuous ground from the service panel to the water heater. When aluminum conductor is substituted for copper in the above installation, the wire size must be #8 nonmetallic cable. Circuit to be protected with 30 ampere fuses or breaker.

When wiring a water heater from existing 60 ampere service box, a 30 ampere 240-volt fuse box must be used and located within inches of the 60 ampere panel. It is also suggested that a 30 ampere fuse box be located within reach of the water heater.

Water heaters should have two thermostatically-controlled noninductive heating elements. Thermostats should be so arranged to allow one element to operate at a time.

Water heaters must be equipped with a safety relief valve. The relief valve must be located in the hot-water line not more than 6" from the heater.

A shut-off valve should be installed on the cold water line going into the water heater.

ELECTRIC WASHER - Shall be wired on a #12/2 nonmetallic cable with ground connected to a 20 ampere current protective device in the service entrance panel and shall be the only appliance on this circuit.

ELECTRIC CLOTHES DRYER - Install # 10/3 copper or #8/3 aluminum nonmetallic cable from 240-volt current protective device, located in or attached to the main service panel, to a flush or surface mounted 30 ampere receptacle at the location of the dryer. Connect dryer with 30 ampere 3-wire dryer cord set. Range receptacle and cord set for dryer 6,000 watts or less are not acceptable.

When wiring clothes dryer from an existing 60 ampere service box, unless properly protected inside the panel, a 30 ampere 240-volt current protective device must be used and located within inches of the service box.

FURNACE (fossil fuel) - Shall be wired on an individual 120-volt circuit with fusing in the main service panel and a separate disconnect installed at or on the furnace. The conductor shall be a nonmetallic cable and should not be smaller than #12/2 copper with ground.

WATER PUMP - It is recommended that pump motors of 1 HP or larger be wired on a 240-volt circuit. Use wire according to the amperage of the motor. The nonmetallic cable shall be protected in the main service panel according to the size of the conductor and shall be extended to a 30 ampere circuit protective device located within reach of the pump motor.

Use either 2-wire NM (nonmetallic cable with bare ground or 3-wire NM (nonmetallic) cable and connect the equipment grounding conductor to the motor frame.

No wire which feed a water pump should go through the attic as most fires are roof or attic fires and will interrupt the operation of the water pump in a time of danger.

KEEP SPARE FUSES ON HAND

It is a good idea to have a spare set of main cartridge fuses on hand at all times in case of emergency. Since these fuses are used in the service entrance equipment which you must maintain, it is your responsibility to replace them if they are blown. It cannot be determined by sight if a fuse in blown. Unless you have equipment to test the fuse, the only way to determine if it is blown is to replace it with a fuse known to be good.

SECTION IV

TEMPORARY OR MOBILE HOME INSTALLATION

The term "MOBILE HOME" shall be defined as any mobile type of vehicle or housing unit which may be used for residential living or commercial purpose and such unit can be readily converted to mobile use, and is not constructed so as to become a part of the real estate upon which it may be erected.
TEMPORARY INSTALLATIONS MAY CONTINUE for a period of time necessary to construct, remodel, or demolish the building.

TEMPORARY SERVICE

Temporary service location must be approved by the REMC and must not be over 75 feet from the last REMC pole.

It is to be used only during construction of dwelling or other building where service is not available. This type service may be used only until the construction is complete and the building is ready for occupancy. On completion of building, consumer must have the permanent entrance installed.

Upon notification, the REMC will make the transfer from temporary to permanent service.

The following sketch shows the minimum requirements that must be met by the consumer before temporary service can be energized. All material must be weatherproof to comply with the National Electric Code.

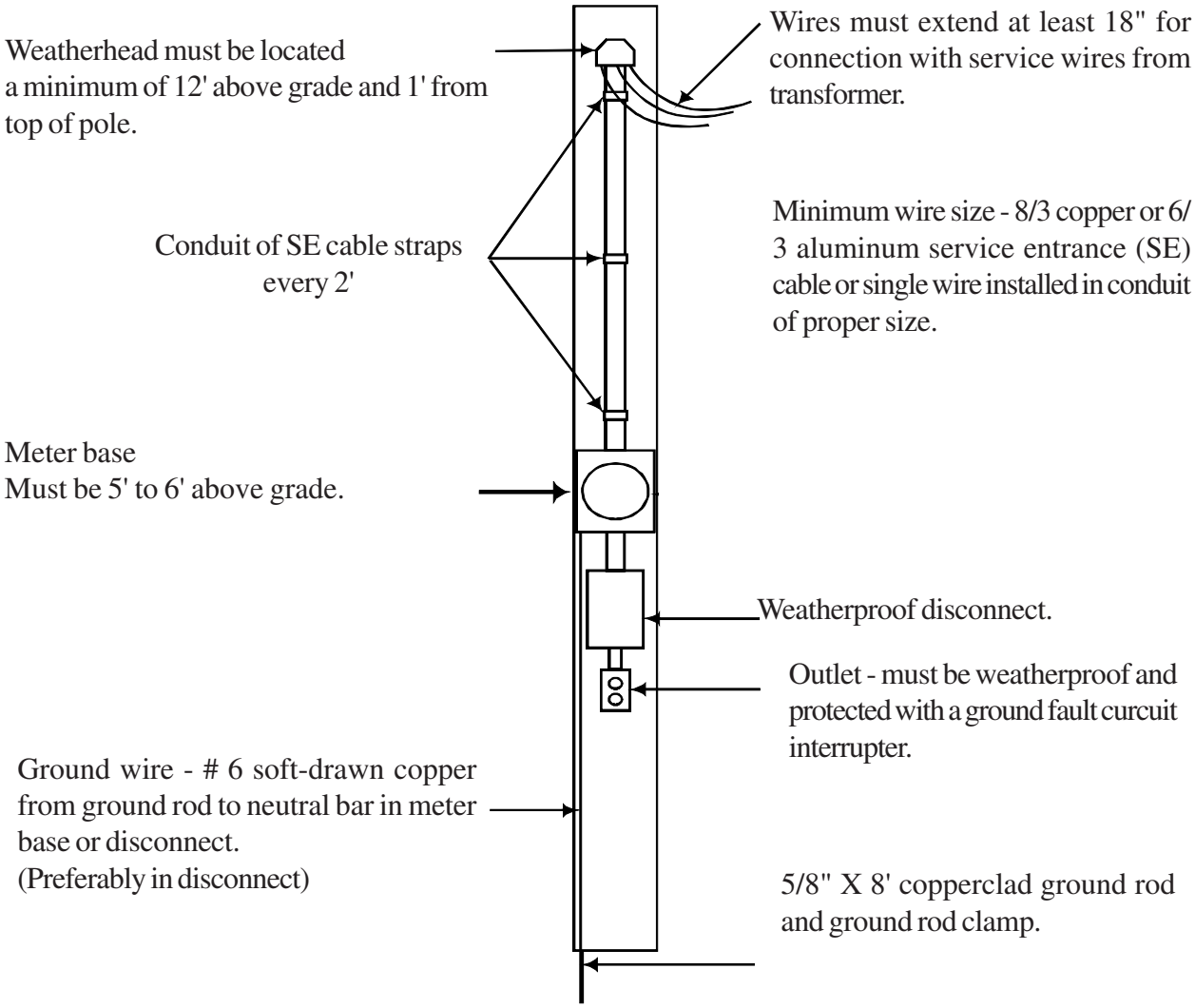

METER ON POLE - 100 OR 200 AMPERE INSTALLATION

Service location must be approved be the REMC.

The service must be installed on a treated pole, furnished by Carroll County REMC. All material used on the pole must be weatherproof to comply with the National Electrical Code.

The ground rod must be at least 5/8" in diameter and 8 feet in length, driven near the base of the pole. A ground wire of not less than #6 bare soft-drawn copper must be used from the ground rod to the ground lug in the meter base or neutral bar in the load center.

The service entrance may not be less than 100 ampere.

The following sketch shows the minimum requirements that must be met by the consumer before service will be connected to a meter pole.

CONTACT THE REMC BEFORE MOUNTING ON TRANSFORMER POLE

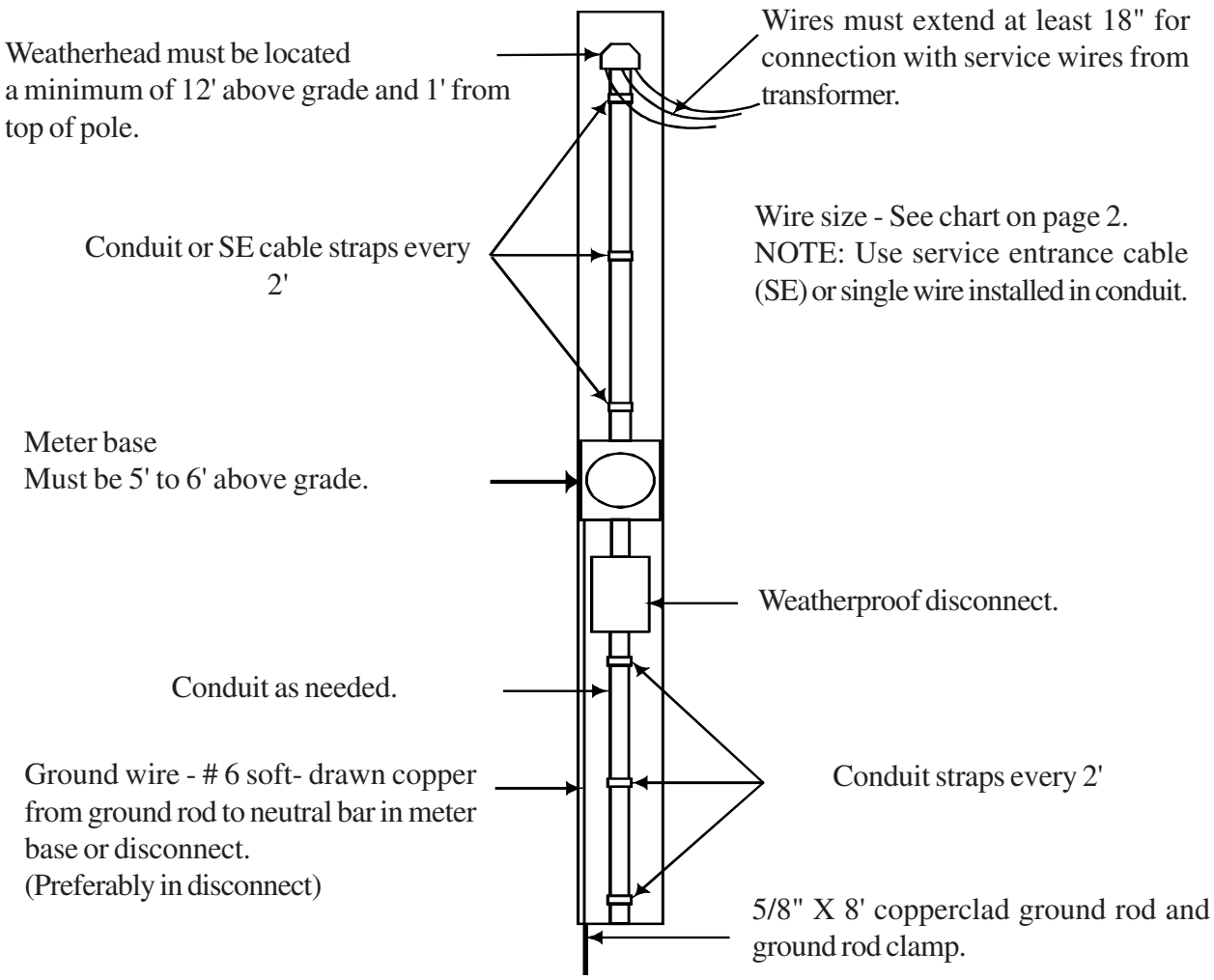

200 AMPERE METER POLE OVERHEAD SERVICE INSTALLATION

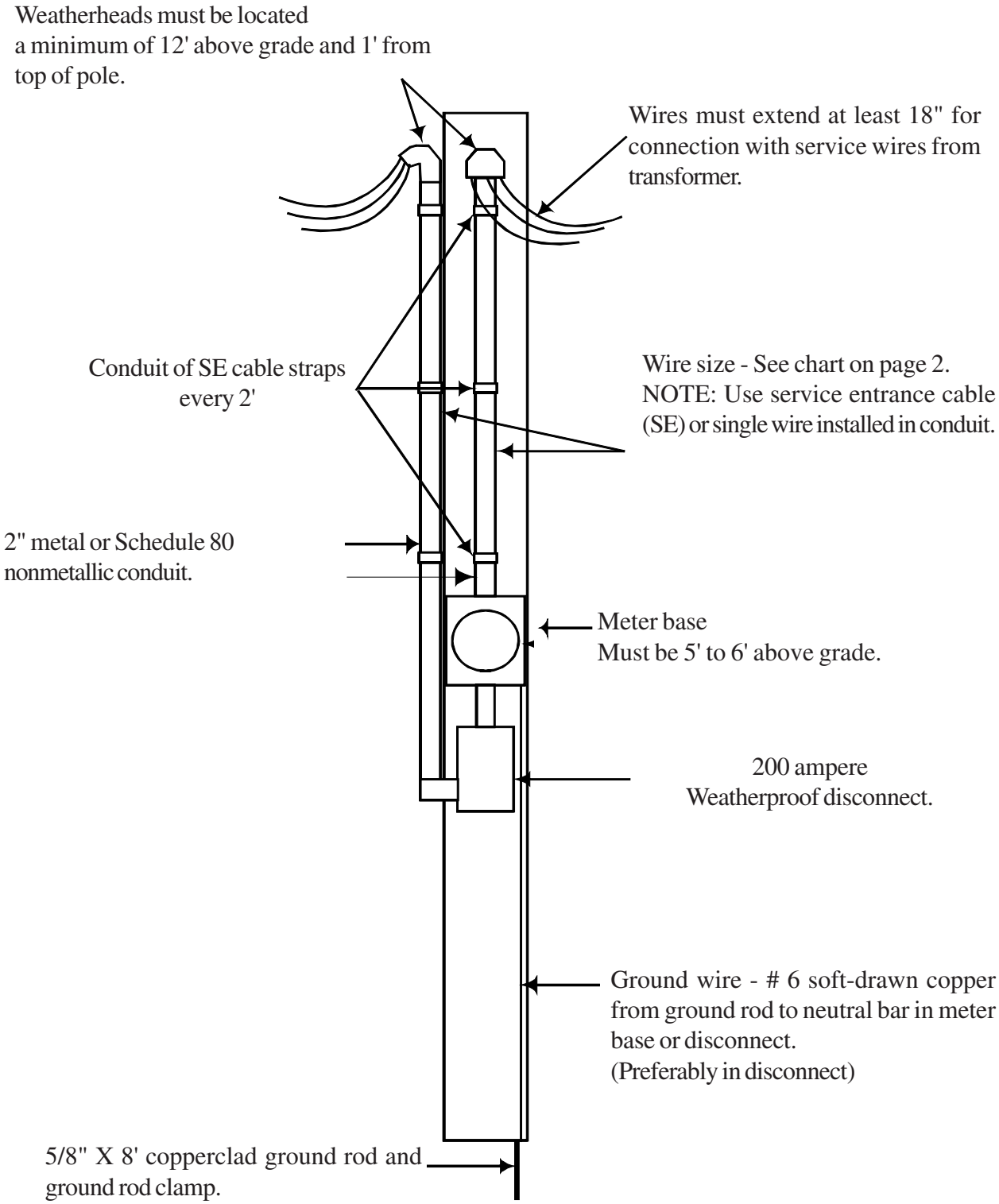

METER ON HOUSE
100 OR 200 AMPERE SERVICE ENTRANCE

Use proper locknuts, bushings and conduit fittings as needed.

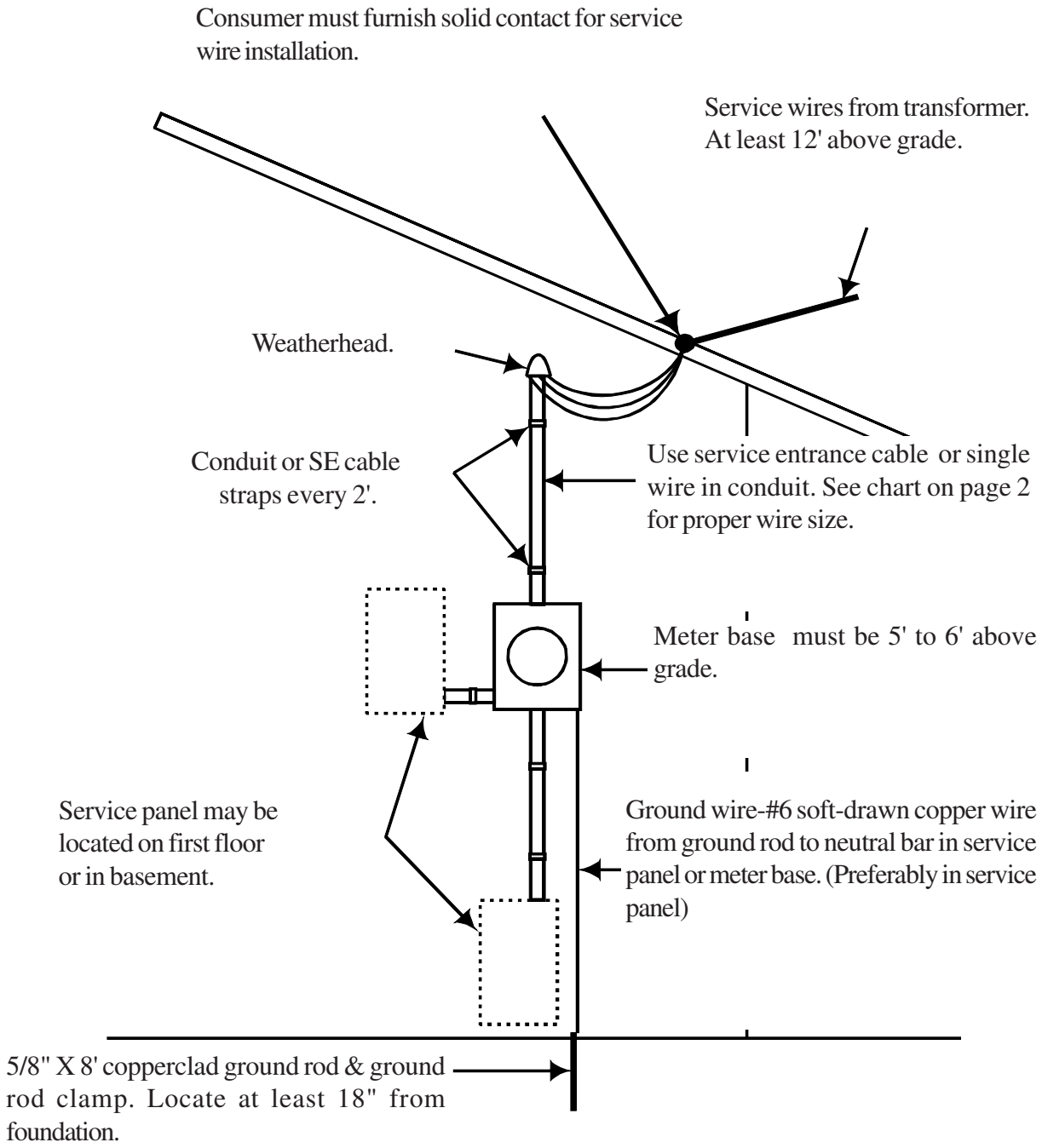

METER ON HOUSE
100 OR 200 AMPERE SERVICE ENTRANCE

Use proper locknuts, bushings and conduit fittings as needed.

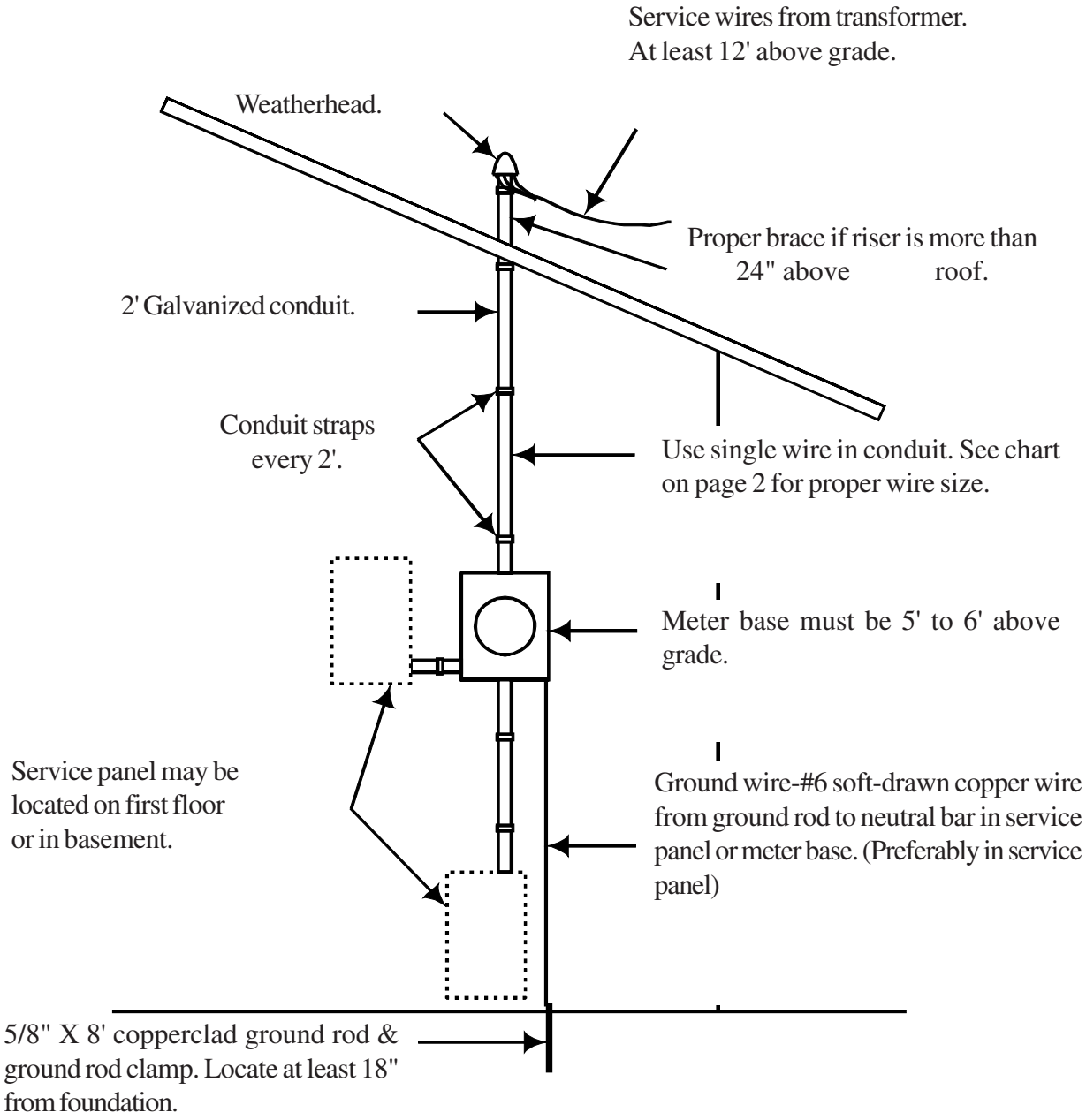

UNDERGROUND SERVICE TO PERMANENT DWELLING

Carroll County REMC will provide underground secondary electric service to its members upon request if such service can reasonably be provided in accordance with the established REMC policy and National Electric Code.

THE MEMBER SHALL:

1. The member or his authorized agent shall open and backfill the trench used for underground wire from the transformer to the meter base.
The trench must be a minimum of 36 inches deep.

2. Install electric service entrance including meter base. Meter base will be installed in an accessible outside location. Location must be approved by REMC.

3. Furnish and install to REMC specifications a minimum of 2" plastic Schedule #80 conduit for 200 ampere service, a male adapter and 2" nuts or 3" Schedule #80 conduit with a male adapter and 3" nuts for 400 ampere service from the meter base down to a point 12" below finish grade.

NOTE:

If there is any change at all that the area below the meter base location would be covered with concrete or paved in any way, it will be necessary that a sweep elbow and enough conduit be installed to reach the outside edge of the paved area.

4. The conduit through which the service wires from the transformer enter the bottom of the meter base will be installed in the left or right side knockout (looking at the bottom of the meter base). Do not use center knockout.

5. There must be at least 12 inches of free space between the concrete footing and the lower end of the conduit where the service wires enter. All sharp edges must be removed from the concrete footing to avoid damage to the service wire installation.

6. Bare ground wire must be on the outside of the conduit and enter the meter base through small knockout provided for that purpose. Drive ground rod so there is no chance of service wires coming in contact with ground rod or ground wire. If metal conduit is installed, a grounded bushing must be installed on the conduit inside the meter base and bonded to the ground wire. A plastic bushing must be installed on the lower end of

the conduit extending below ground level. If nonmetallic conduit is installed, protective bushings shall be installed.

7. Give a 20' wide easement, beginning at the terminal pole and extending to the point directly below the meter. If an easement to cross another person's property is required, the member requesting underground service will be responsible for obtaining said easement in the name of the Carroll County REMC.

8. The member shall refrain from digging or planting trees and shrubbery that would interfere with underground equipment or would make it difficult to open the trench for servicing the cable.

9. The member shall call Indiana Underground to have all existing utilities located by dialing 811 before the installation of the service begins.

THE CARROLL COUNTY REMC WILL PROVIDE THE FOLLOWING:

1. The REMC will furnish the meter.

2. Furnish, install, own and maintain at its expense, the required conduit at terminal pole and the required underground cable.

3. The REMC will lay the cable in the trench provided by the member. Any future backfill needed due to settling will be the responsibility of the member.

200 AMPERE UNDERGROUND SERVICE ON HOUSE

Trench from pole to meter base shall be provided by member. Trench shall be a minimum of 36 inches deep.
Use proper locknuts, bushings and conduit fittings as needed.

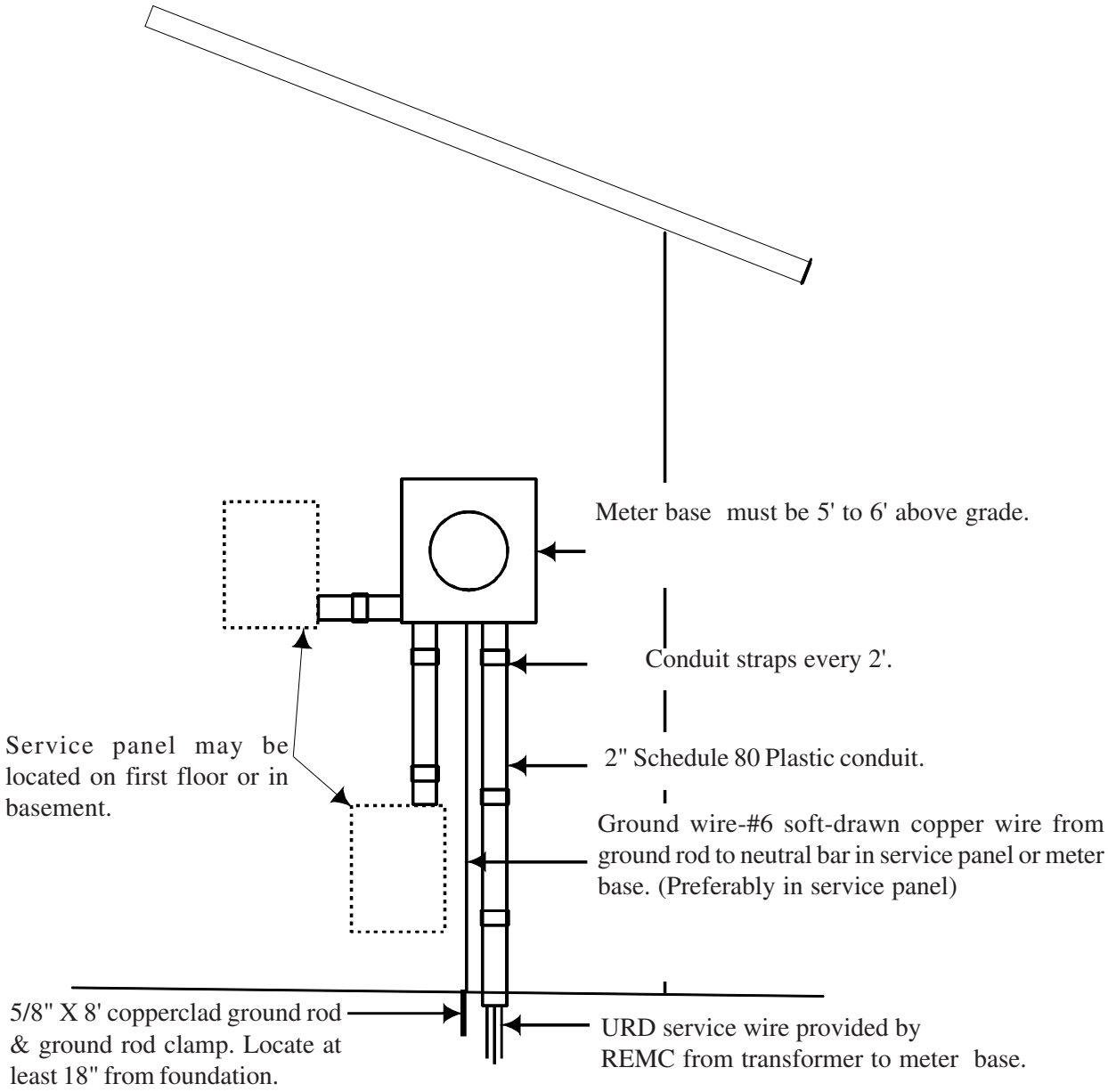

UNDERGROUND LOAD CENTER

All wood material must be new pressure treated and suitable for burial.
Painted surfaces are not acceptable.
Trench from pole to meter base shall be provided by member.
Trench shall be a minimum of 36 inches deep.
Use proper locknuts, bushings and conduit fittings as needed.

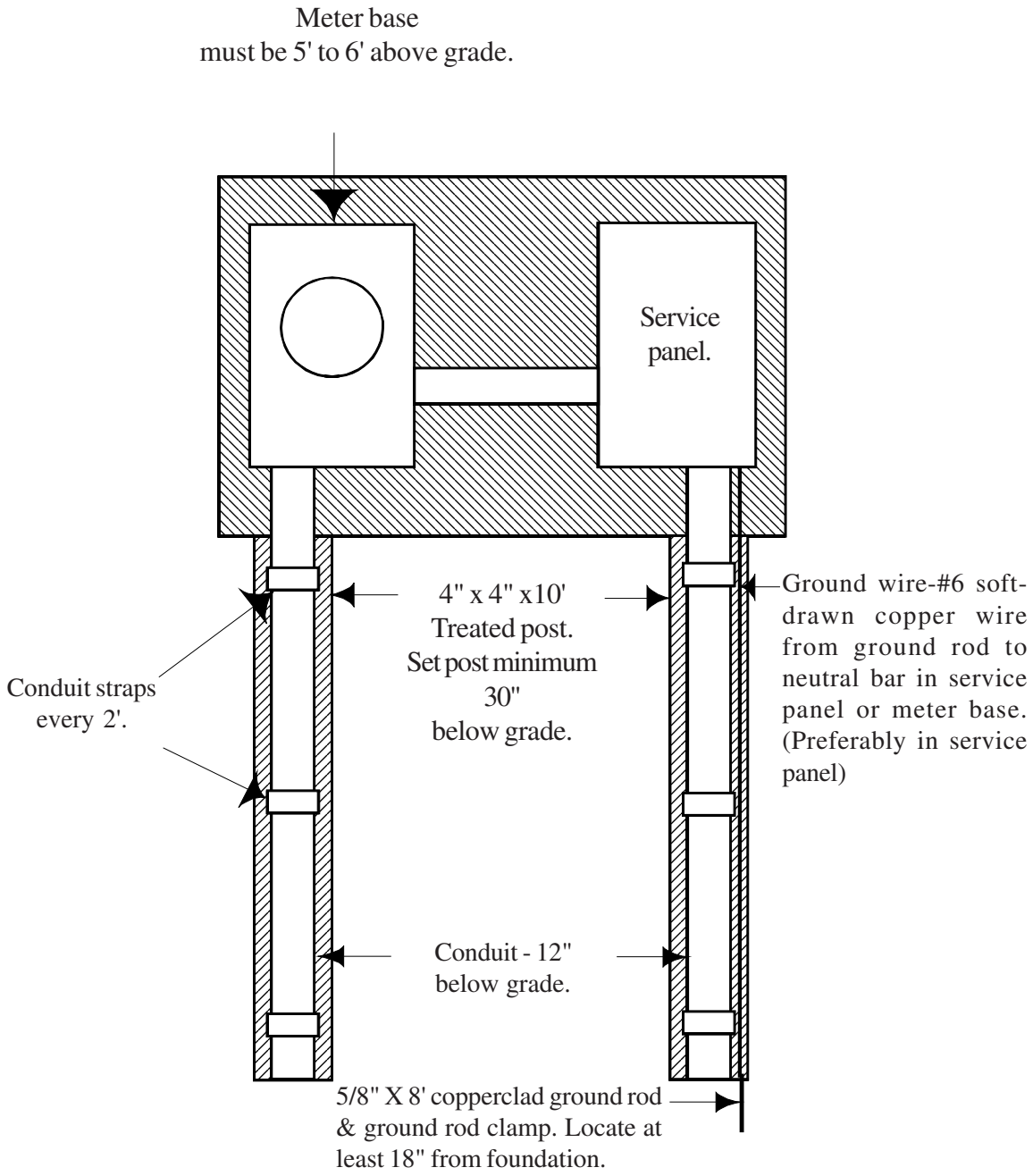

NOTES

POWER FAILURE INSTRUCTIONS

IF YOUR POWER GOES OFF:

1. **Check your fuses of breaker.**
2. **Check with your neighbors to see if they are out of power.**
3. **If so, call Carroll County REMC promptly.**

765-564-2057
or
Toll Free: 800-506-7362

4. **Give the name of the person whom the meter is listed under and your phone number. Give a description of the problem.**

DAY or NIGHT
Service related calls will be accepted anytime.

The cooperative's responsibility ends at the weatherhead connection. Any trouble beyond this connection is the member's responsibility. If you have trouble with fuses, wiring, or appliances, contact an electrician.

HAVE YOU HEARD ABOUT OUR

✓ *Water Heater Program*

✓ *Heat Pump Rebate Program*

✓ *Security Light Installation*

✓ *Surge Suppressors*

For more information on the above programs, contact

CARROLL COUNTY REMC
119 W FRANKLIN ST
DELPHI IN 46923
(765)564-2057
Toll Free: (800)506-7362

OFFICE HOURS
7:30 am - 4:30 pm
Monday thru Friday